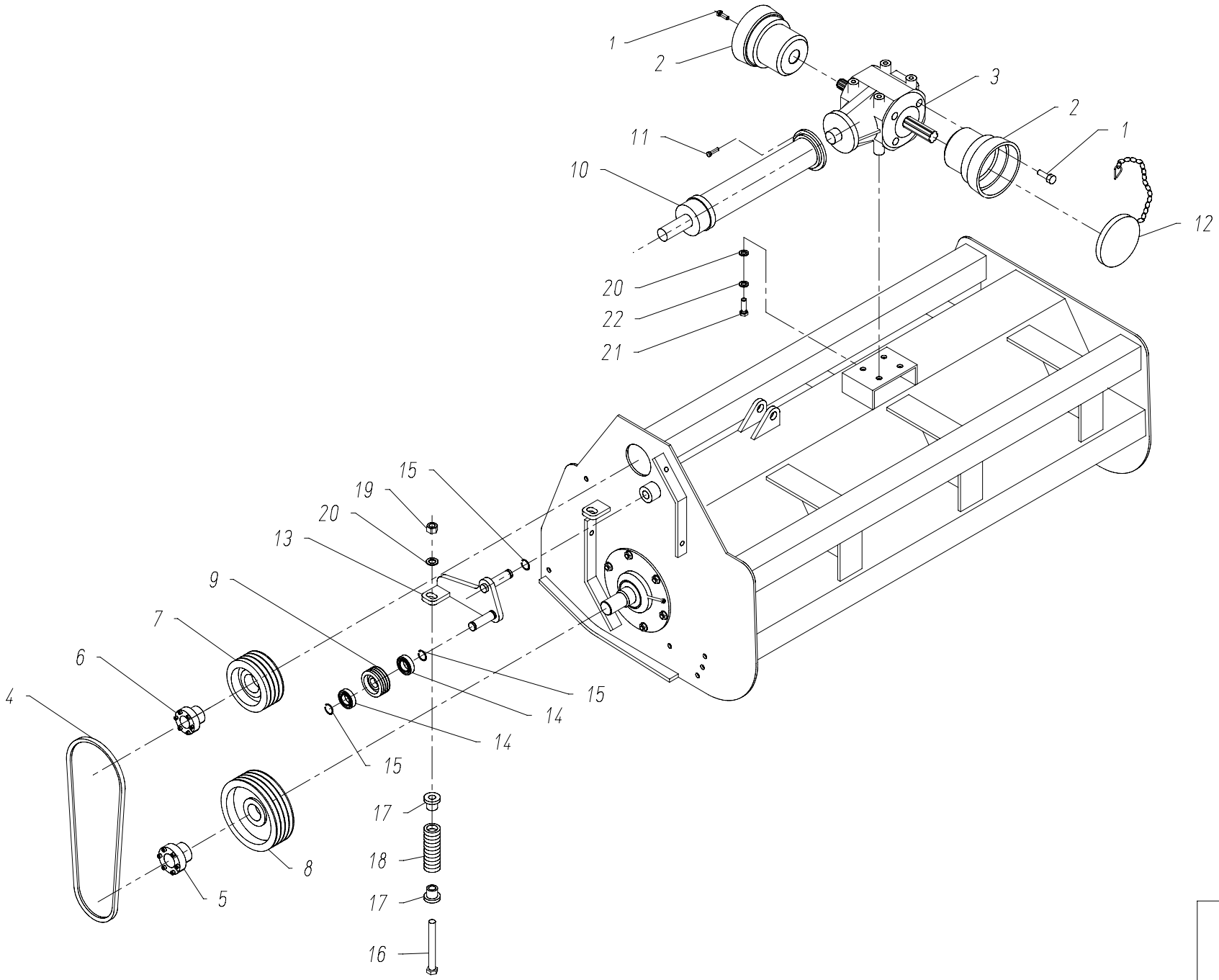

TIPO. TRASMISSIONE HF	TAV.0392	REV.001	AGG.08/03/2006

TIPO: TRASMISSIONE HF	TAV. 0392	REV. 001	AGG. 08/03/2006	PAG. 1/1

POS.	CODICE	NOTE	Q.TA’
1	11108081		8
2	00019508		2
3	00021542	HF 1550/1800/2000/2300/ 2600 - 540 RPM	1
	00021543	HF 1550/1800/2000/2300/ 2600/2800/3200 - 1000 RPM	
4	00010021	HF 1550/1800/2000	4
		HF 2300/2600/2800/3200	5
5	00018018		1
6	00018023		1
7	00018542	HF 1550/1800/2000	1
	00018543	HF 2300/2600/2800/3200	1
8	00018571	HF 1550/1800/2000	1
	00018569	HF2300/2600/2800/3200	1
9	30027639		1
10	00025548	HF 1550/1800/2000/2300	1
	00021514	HF 2600	
	00025549	HF 2800	
	00025564	HF 3200	
11	11212081		4
12	00019511		1
13	30027511		1
14	00011043		2
15	10100300		3
16	11016506		1
17	30027524		2
18	30000860		1
19	10134161		1
20	11160000		5
21	11116101		4
22	12160000		4

POS.	CODICE	NOTE	Q.TA’