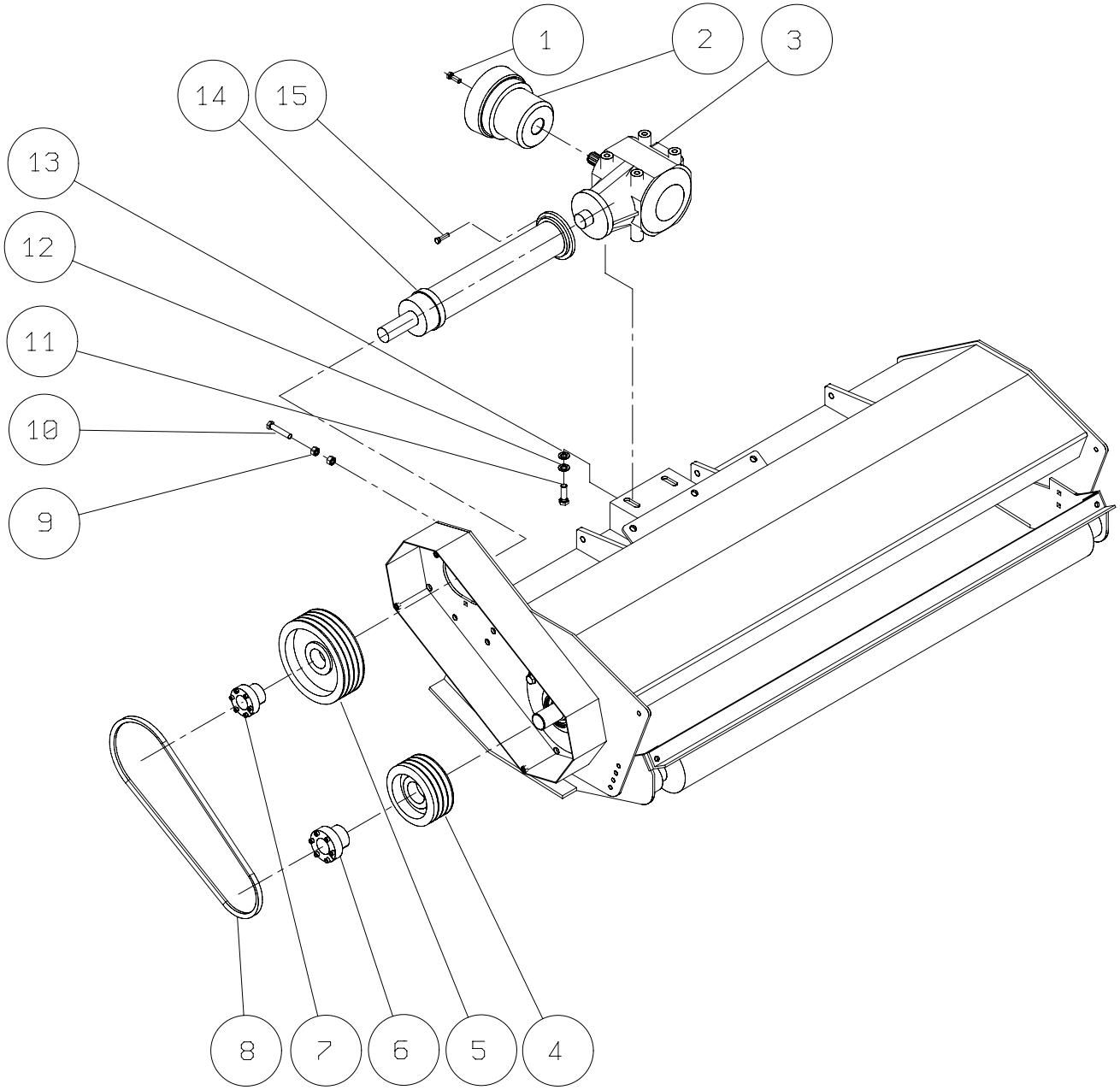


| | | | |
|---|---|---|---|
| TIPO. TRASMISSIONE TM | TAV.0396 | REV.000 | AGG.01/06/2004 |

| TIPO: TRASMISSIONE TM | TAV. 0396 | REV. 000 | AGG. 01/06/2004 | PAG. 1/1 |
|---|---|---|---|---|

| POS. | CODICE | NOTE | Q.TA’ |
|---|---|---|---|
| 1 | 11108081 | | 4 |
| 2 | 30001950 | | 1 |
| 3 | 00025545 | | 1 |
| 4 | 00018546 | | 1 |
| 5 | 00018540 | | 1 |
| 6 | 00018023 | | 1 |
| 7 | 00018018 | | 1 |
| 8 | 00010011 | | 4 |
| 9 | 10135141 | | 2 |
| 10 | 11114181 | | 1 |
| 11 | 11116101 | | 4 |
| 12 | 12160000 | | 4 |
| 13 | 12120000 | | 4 |
| 14 | 00025548 | TM 1800/2000/2300 | 1 |
| | 00025549 | TM 2500 | 1 |
| | 00025557 | TM 2800 | 1 |
| 15 | 11212081 | | 4 |

| POS. | CODICE | NOTE | Q.TA’ |
|---|---|---|---|