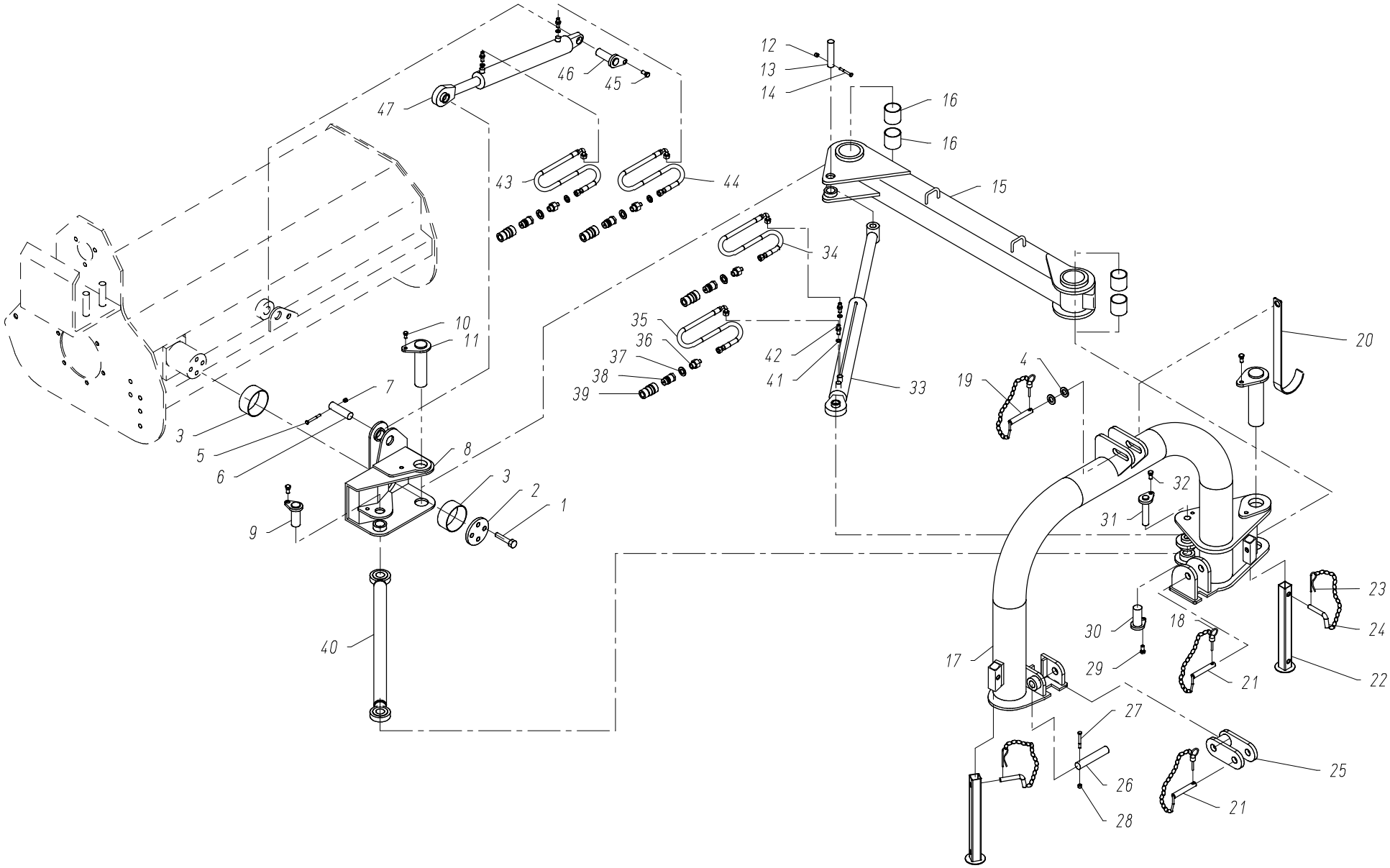

TIPO. SPOST.	TAV.0493	REV.000	AGG.10/04/2006

TIPO: GR. SPOSTAMENTO	**TAV**. 0493	**REV**. 000	**AGG**. 10/04/2006	**PAG**. 1/1

POS.	CODICE	NOTE	Q.TA'	POS.	CODICE	NOTE	Q.TA'
1	11110081		4				
2	01014046		1				
3	00025563		2				
4	11270000		2				
5	11008161		1				
6	30027978		1				
7	10114081		1				
8	30028703		1				
9	30026401		1				
10	11110061		2				
11	30026113		2				
12	10114061		1				
13	30028884		1				
14	11106131		1				
15	30028700		1				
16	00025529		4				
17	30028696		1				
18	00020501		2				
19	00020521		1				
20	30026320		1				
21	00020513		2				
22	30013390		2				
23	00020506		2				
24	30025576		2				
25	30026067		1				
26	30024796		1				
27	11108151		1				
28	10114081		1				
29	11112071		1				
30	30026065		1				
31	30028721		1				
32	11112071		1				
33	30026540		1				
34	00028848		1				
35	00028849		1				
36	00014012		4				
37	00013013		4				
38	00024013		4				
39	00024015		4				
40	30026057		1				
41	00013012		4				
42	00014011		4				
43	00028846		1				
44	00028847		1				
45	11112071		1				
46	30026157		1				
47	30028889		1				

PDF created with FinePrint pdfFactory trial version http://www.fineprint.com